1

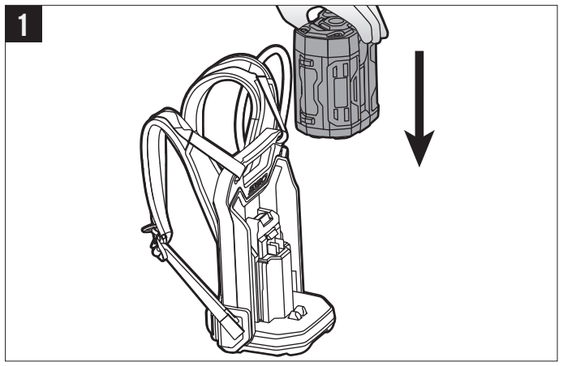

2

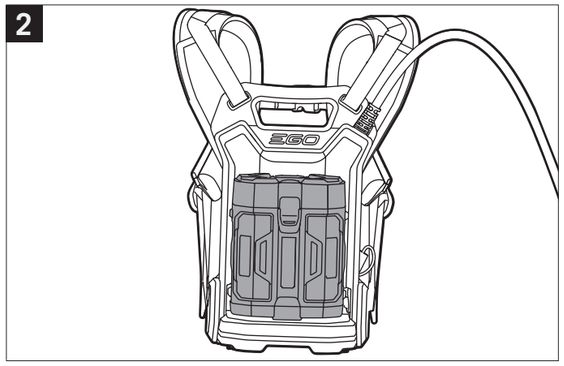

8-A

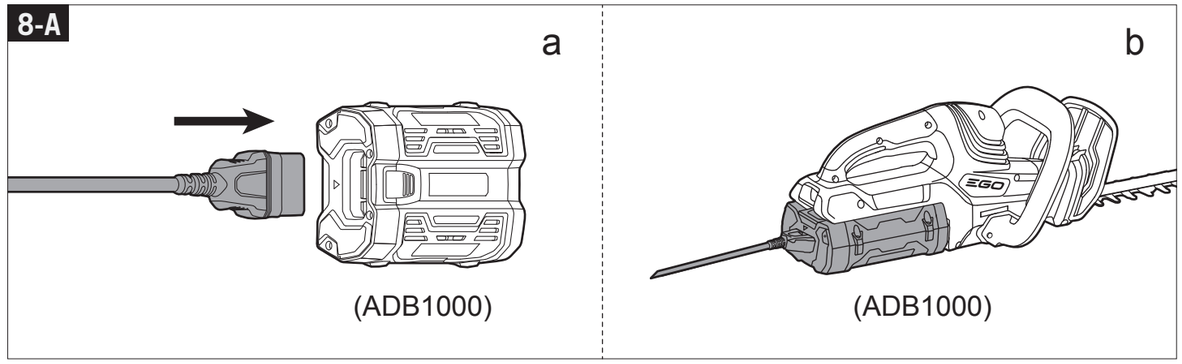

3

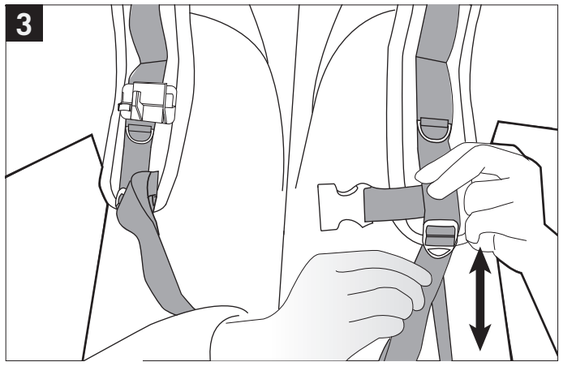

4

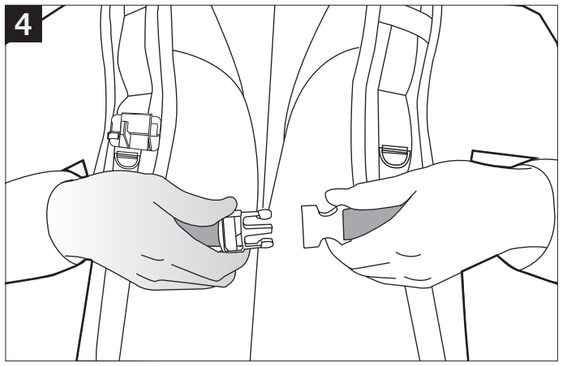

8-B

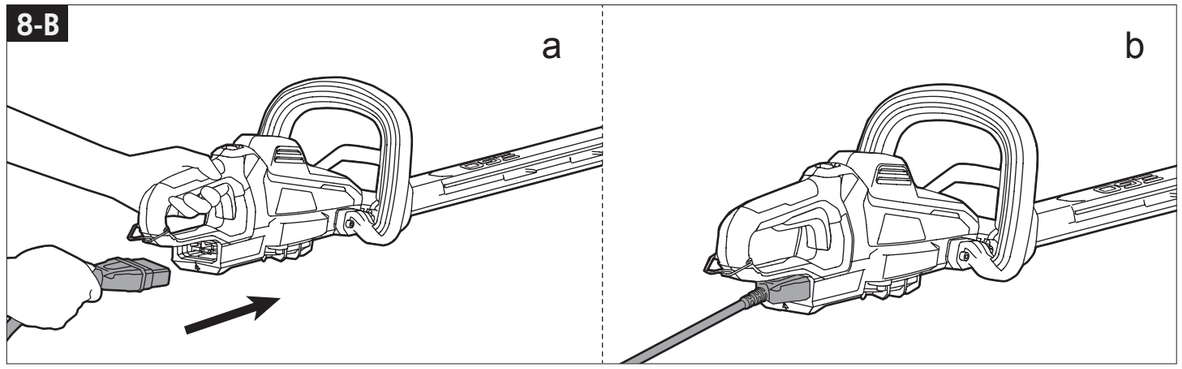

5

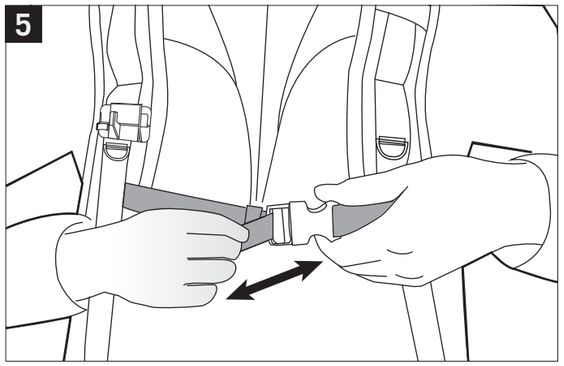

6

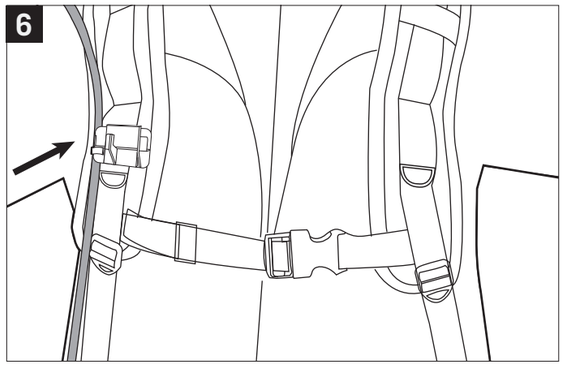

7

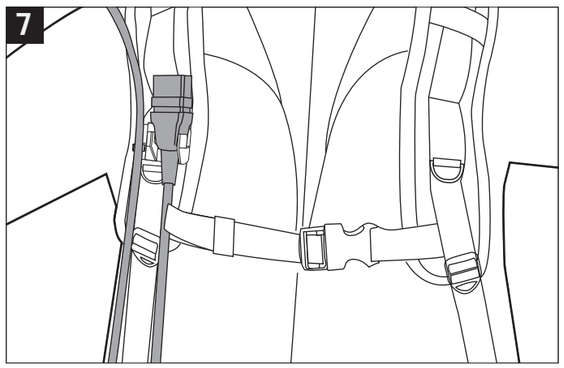

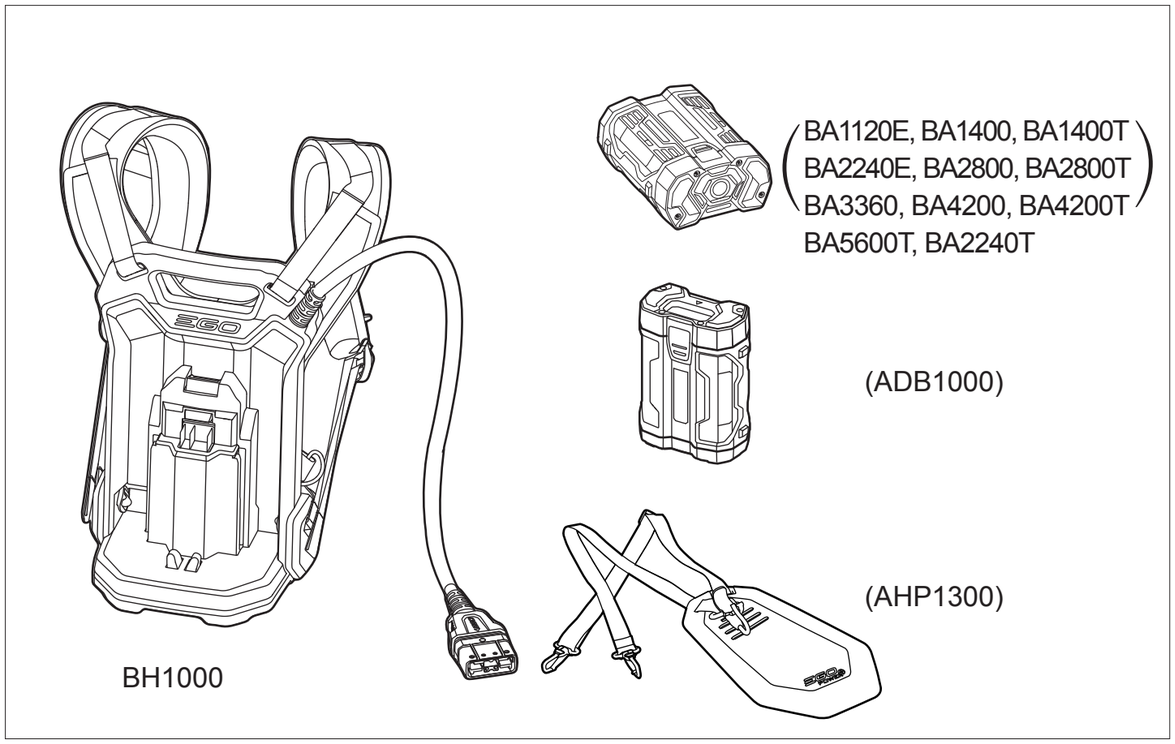
BA1120E, BA1400, BA1400T
BA2240E, BA2800, BA2800T
BA3360, BA4200, BA4200T
BA5600T, BA2240T
(ADB1000)
(AHP1300)
BH1000

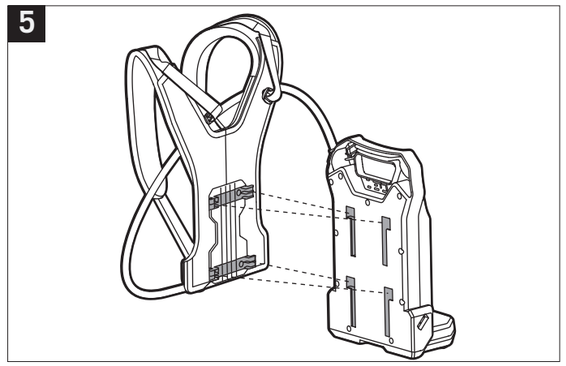
5

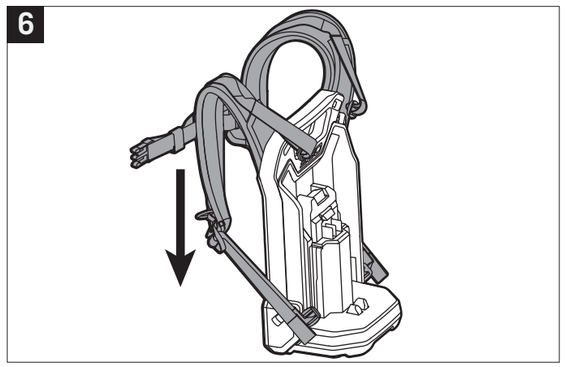
6

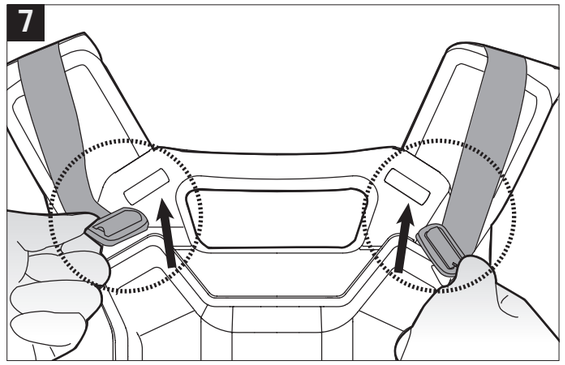
7

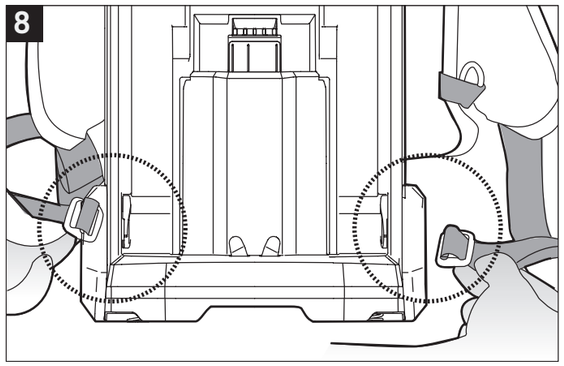
8

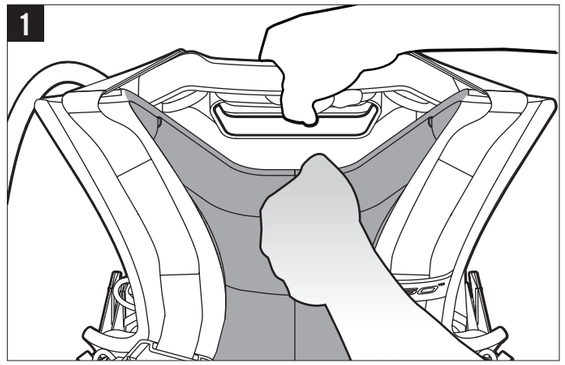
1

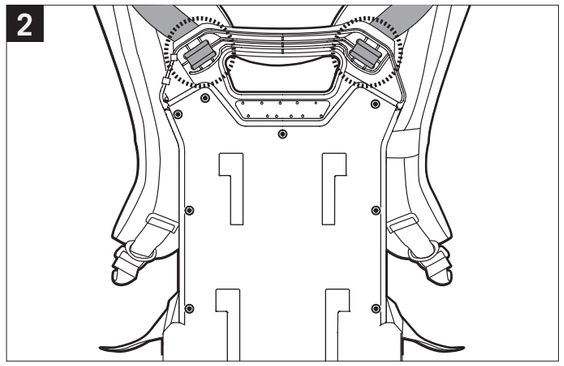
2

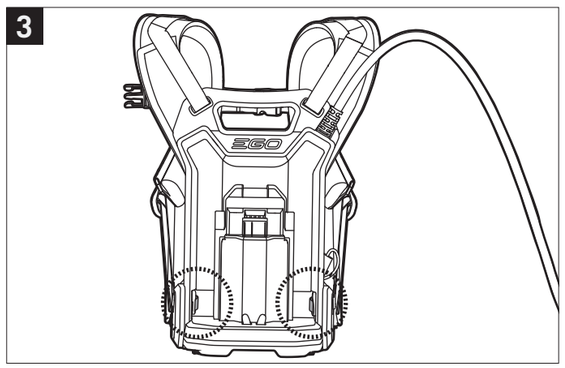
3

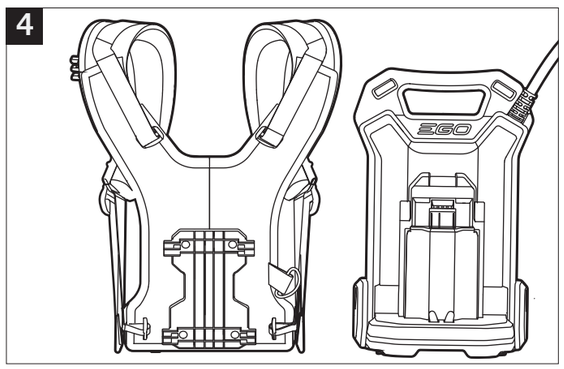
4

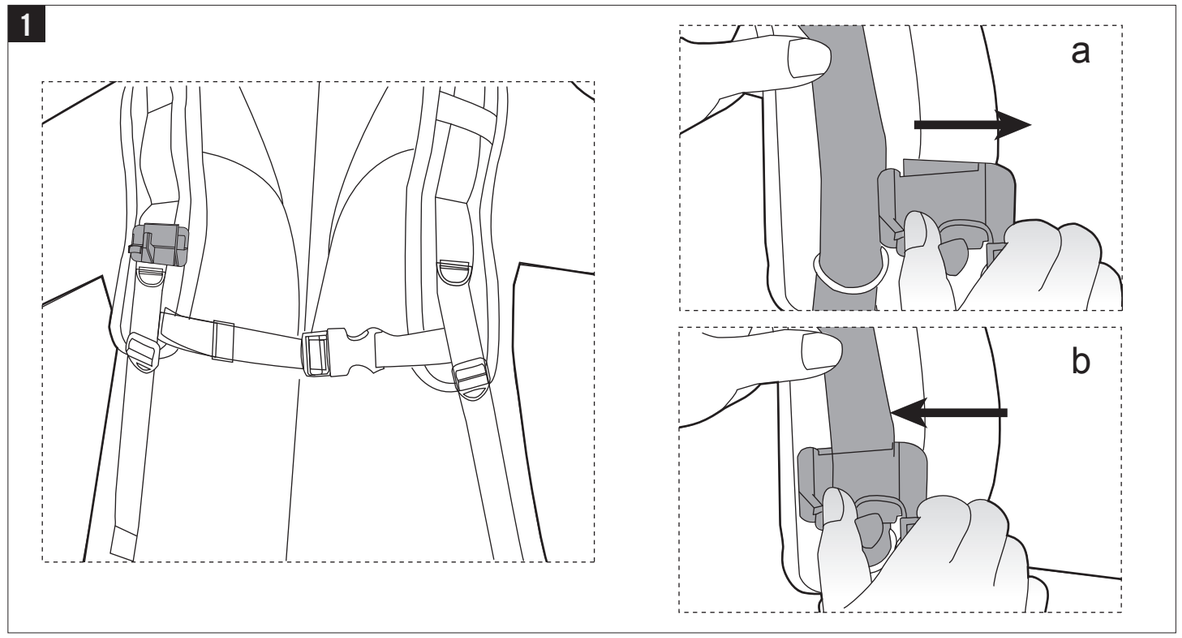
1
a
b